POWER FREQUENCY CONTROL

1. INTRODUCTION 2

2. SMALL SIGNAL ANALYSIS OF POWER SYSTEMS 5

3. STATIC PERFORMANCE OF SPEED CONTROL 6

4. THE POWER SYSTEM MODEL 8

5. THE RESET LOOP 11

6. POOL OPERATION 14

7. STATE-SPACE REPRESENTATION OF A TWO AREA SYSTEM 19

REFERENCES 23

1. Introduction

The general requirements for the operation of a power network are that the frequency and voltage be maintained within designated limits. Frequency is a system-wide parameter in the steady state as a system (or a number of interconnected systems) has the same frequency throughout. Voltage varies considerably within a power network and depends on the loading. Typically, the limits for frequency variation are ±0.4% (±0.2Hz in a 50Hz system or a frequency band of 49.8→50.2Hz). This is the normal range for the Irish system[1]. The range during transmission disturbances is 48Hz to 52Hz and during exceptional transmission disturbances is 47Hz to 52Hz. The permissible variation in voltage is much greater, typically ± 6%.

As has been seen from load flow analysis, there is a strong correlation between load or rotor angle (and hence frequency) and active power and between voltage and reactive power.

$$\mathbf{f \Leftrightarrow P}$$
$$\mathbf{V \Leftrightarrow Q}$$

Essentially, frequency in a power system is controlled by ensuring that the injected power (from the connected generators) matches the system load, with all losses taken into account. Voltage is controlled by the injection of reactive power to meet the reactive demand, together with other measures such as transformer tap changing and automatic voltage regulator (AVR) action. Figure 1 shows the AVR and turbine control loops in a generation station.

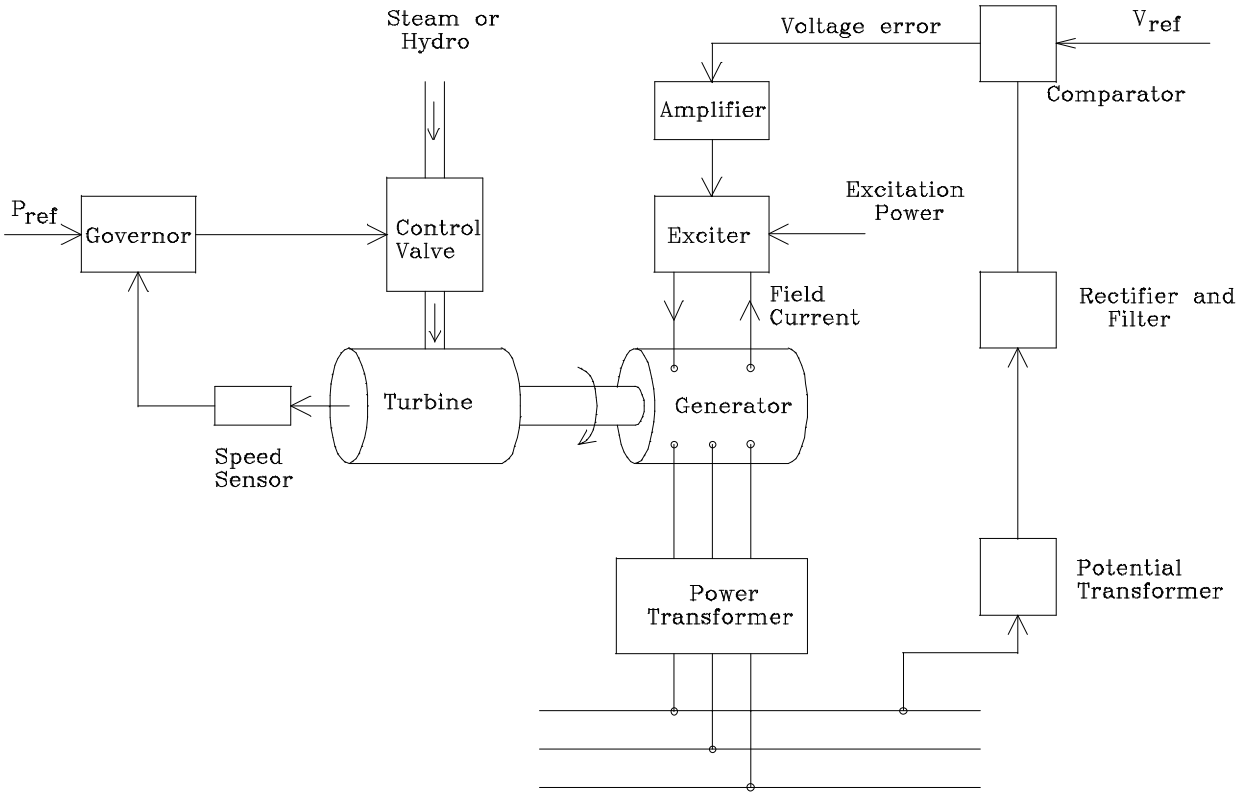

Figure 1 AVR and Turbine Control Loops

[1] Grid Code, www.eirgrid.ie

This section considers the control of frequency in a power system and the effect of interconnection to other systems on power flows and frequency. The system frequency is determined by the speed of rotation of the generators in the system, which in turn is determined by the balance between generator and load power; essentially the balance between input and output power. Figure 2 shows a schematic representation of a fossil fuel fired boiler/turbine/generator. The voltage and speed control inputs can be identified.

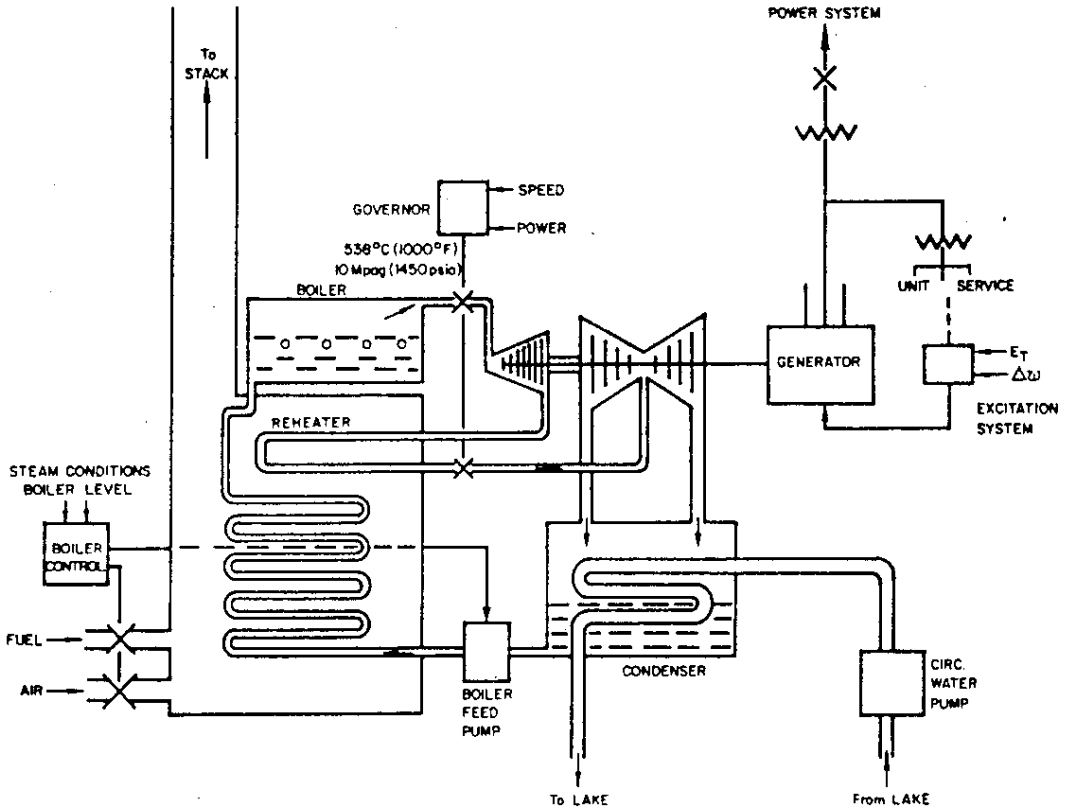

Figure 2 Fossil fired drum boiler/turbine/generator schematic diagram

Voltage control is considered separately. We can say that there are two control loops in a power system: the automatic load frequency control loop (ALFC) and the automatic voltage control loop (AVR). There is little interaction from the ALFC loop to the AVR loop but the AVR loop does affect the ALFC loop to a certain extent. The AVR loop tends to be much faster than the ALFC loop with time constants of much less than one second.

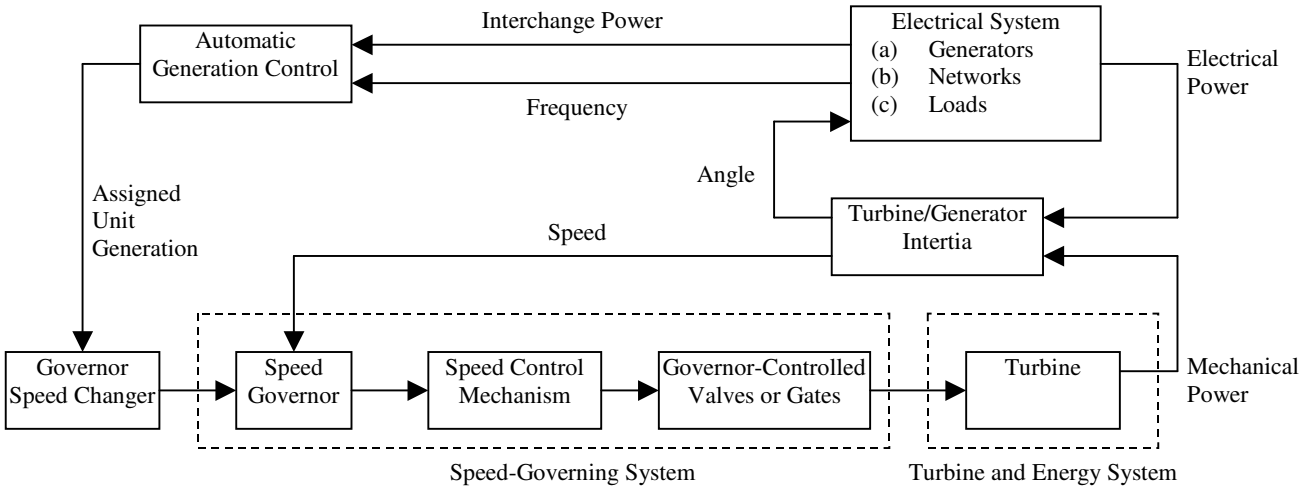

Figure 3 Location of speed-governing system and turbine relative to complete system [5]

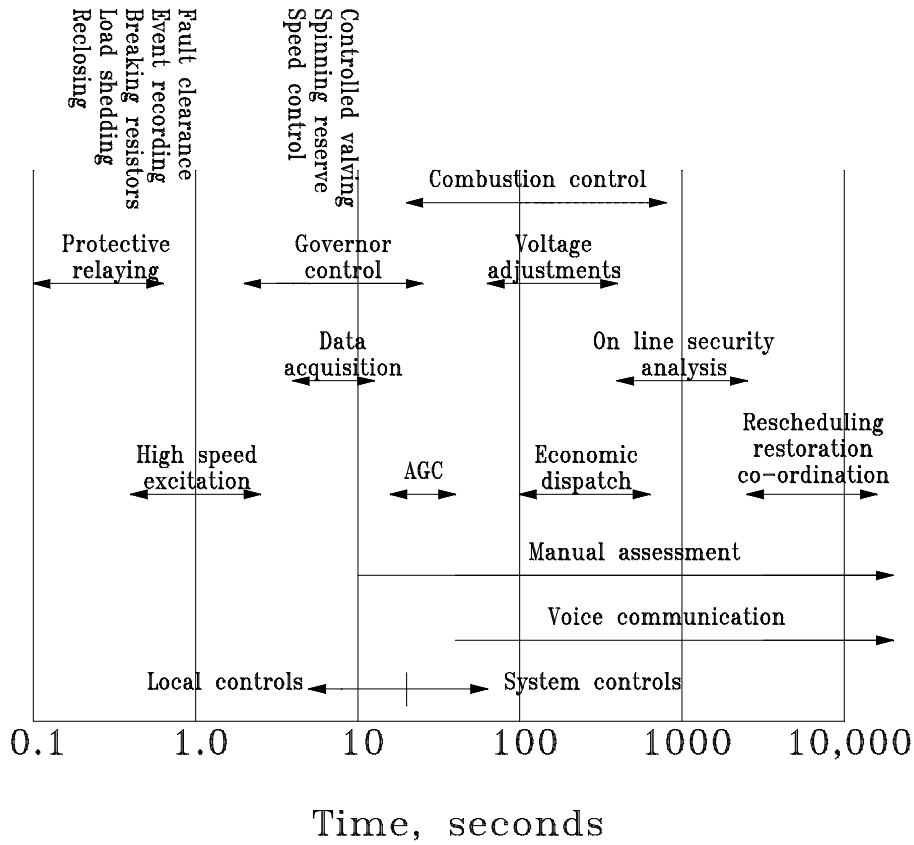

Figure 4 Typical response times of some control functions

Figure 3 shows the location of the speed-governing system and the turbine relative to the complete system. As can be seen, the angle and speed is determined by the difference between the electrical and mechanical power, acting on the inertia of the turbine/generator combination. The speed and the assigned unit generation determine the mechanical power being produced by the turbine. The angle of the generator (in combination with the network, generator and loads) determines the electrical power output. The automatic generation control system determines the assigned unit generation.

Figure 4 shows the typical response times of some control functions within the power network. The high-speed excitation and governing control functions can be identified on the left of the diagram with response times between 1 and 10 seconds. The response times to system faults by protection systems will be faster than this characteristic time in the range of multiples of power cycles, up to 0.1 second.

2. Small Signal Analysis of Power Systems

Analysis of power networks can be divided into small-signal and large-signal analysis. For the time-domain analysis of events, such as major faults where voltages can change by up to 100%, large-signal analysis is required. For small changes, where the response can be considered linear over the typical range, small-signal or linear analysis can be used. Hence the Laplace transform can be used to consider the time domain and frequency domain response of such linear systems. Power frequency control in power systems is usually investigated using linear or small-signal methods.

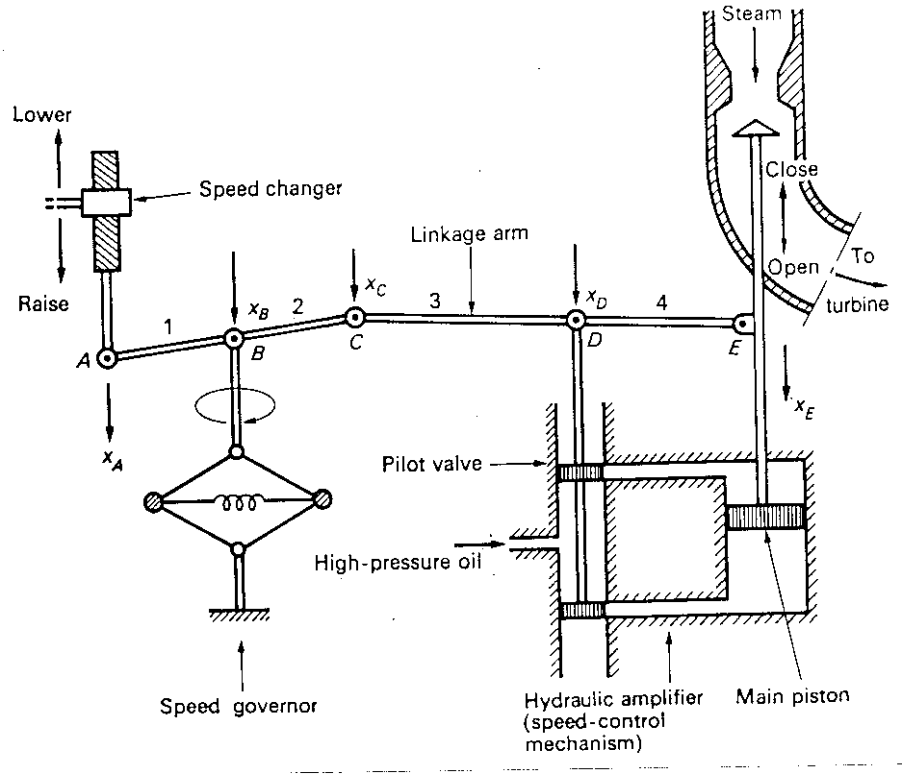

Figure 5 Power control mechanism [1]

Figure 5 shows a physical representation of an automatic load frequency control system for a turbine/generator. This analysis is taken from Elgerd's book [1]. The actual control system on a modern generator would be quite different to that shown here but the system in Figure 5 is useful for the purposes of illustration.

The aim is to maintain the desired MW output of the generator and the rated frequency by controlling the power to the turbine. This in turn is determined by the position of the valve (steam or water). The power output is changed by changing the reference power (speed changer) which indirectly changes the speed. The speed (and hence frequency) is measured by the speed governor. The pressure on the valve and hence position of the main piston is proportional to the fluid into the hydraulic amplifier. The position of the valve (in the Laplace domain is given by):

$$\Delta x_e(s) = \frac{K_G}{1+sT_G}\left[\Delta P_C(s) - \frac{1}{R}\Delta F(s)\right] \tag{2.1}$$

R is in Hz/MW and is referred to the regulation or droop. $\Delta P_{ref}(s)$ is the Laplace transform of the change in the reference power setting and $\Delta F(s)$ is the change in the frequency. We have a relationship between the power into (or piston position) the turbine and the reference power and the frequency. We now require the transfer function for the turbine relating the power in to the mechanical power out. Typically, the following transfer functions are used for turbines:

$$G_T(s) = \frac{\Delta P_T(s)}{\Delta x_e(s)} = \frac{K_T}{1+sT_T} \text{ Steam turbine, no reheat} \tag{2.2}$$

$$G_T(s) = \frac{K_T}{1+sT_T}\left[\frac{1+s\alpha T_{RH}}{1+sT_{RH}}\right] \text{Steam turbine, with reheat} \tag{2.3}$$

$$G_T(s) = K_T\frac{1-2sT_W}{1+sT_W} \text{ Hydro} \tag{2.4}$$

These transfer functions also incorporate the generator representation where $\Delta P_T(s)$ can also be considered to equal the Laplace transform of the electrical power output of the generator as well as the mechanical power output of the turbine. Generally we take $K_G K_T = 1$.

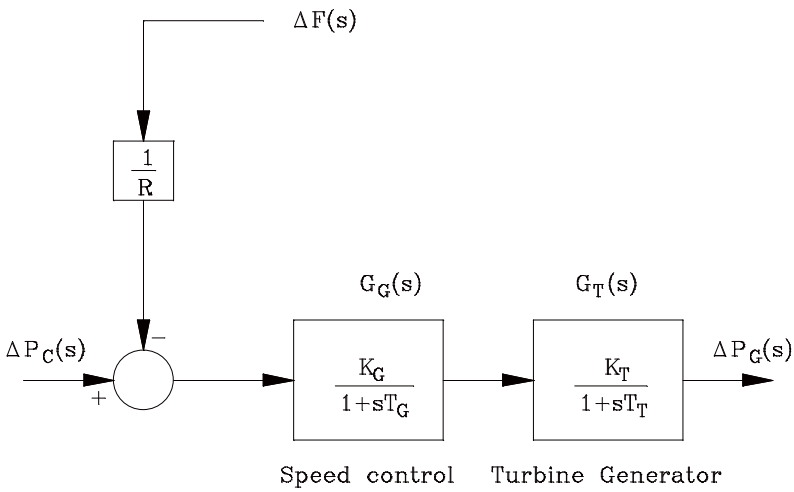

Figure 6 Small signal representation of power control mechanism

3. Static Performance of Speed Control

The steady state response of the speed control system can be determined by applying the Final Value theorem to the system shown in Figure 6.

$$\Delta P_G = \Delta P_c - \frac{1}{R}\Delta f \tag{3.1}$$

If $\Delta f = 0$, which is the case where a generator is connected to an infinite bus, then $\Delta P_G = \Delta P_c$ and changing the reference power is reflected as a change in the power being delivered to the infinite bus. For an isolated generator without changing reference, on the other hand, we have:

$$\Delta P_G = -\frac{1}{R}\Delta f \tag{3.2}$$

and an increase in output power is reflected as a drop in frequency. This drop in frequency is determined by the droop characteristic R. R is a measure of how responsive the speed controller is to changes in frequency and is measured in Hz/MW or more usually Hz/pu MW or %Hz/pu MW. For example, 4% droop means 2Hz/pu MW for a 50Hz system. With changes in both reference power output and frequency, we have a family of curves as shown in Figure 7.

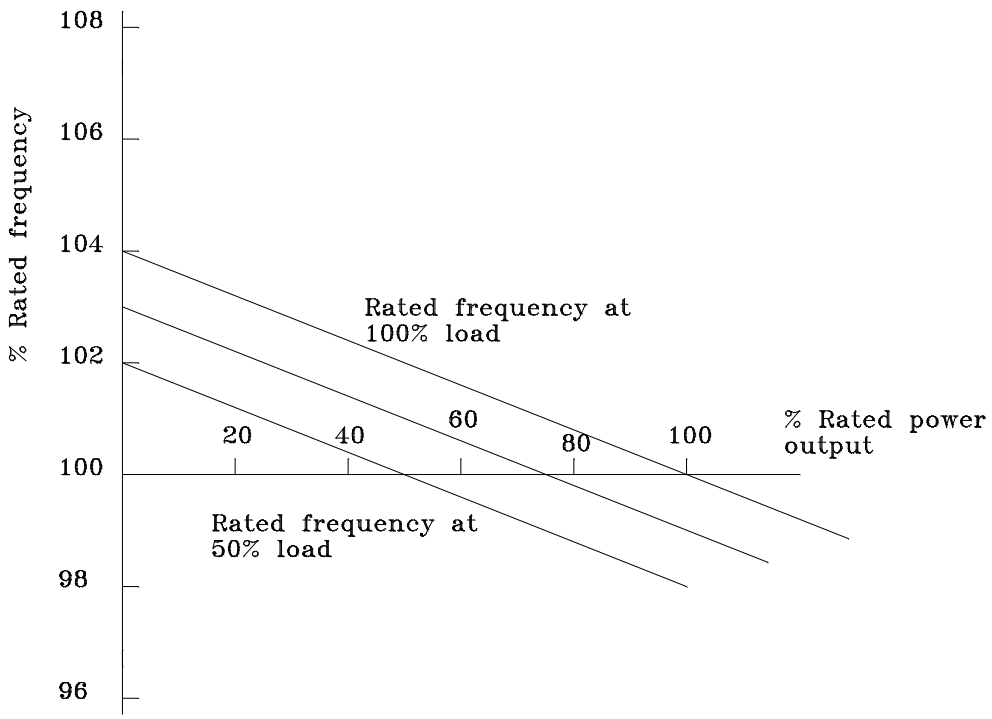

Figure 7 Static speed control response

If we have two generators rated at 50MW and 500MW respectively connected to a common bus and each are at half loading, then a change in the load of 110MW results in a frequency drop to 49.6Hz. The regulation can be calculated as follows:

$$R_1 = \frac{0.4}{10} = 0.04\,\text{Hz / MW} \qquad \text{(Small unit)}$$

$$R_2 = \frac{0.4}{100} = 0.004\,\text{Hz / MW} \qquad \text{(Large unit)}$$

which gives the correct distribution of 1:10 between the machines. The regulation can be expressed as follows:

$$R_1 = 0.04\,\text{Hz / MW} = 0.04\frac{50}{50}\ \text{pu Hz / pu MW} = 4.0\ \ \%\text{Hz / pu MW}$$

$$R_2 = 0.004\,\text{Hz / MW} = 0.004\frac{500}{50}\ \text{pu Hz / pu MW} = 4.0\ \ \%\text{Hz / pu MW}$$

and for correct distribution of load, $R_1 = R_2$ when expressed as %Hz/pu MW.

4. The Power System Model

To close the ALFC loop, we now require a model for the power system. In other words, we need a representation of the dynamic relationship between the changes in the system frequency and the changes in demand power and the output of the generators. This allows us to investigate how the changes in load will affect the frequency.

Initially, we identify the following, pre-disturbance operating condition:

f^0 - initial frequency

W_{kin}^0 - initial kinetic energy

$\Delta P_G = 0$

$\Delta P_D = 0$

With changes in the system frequency, there are changes in the kinetic energy of the rotating machinery:

$$W_{kin} = W_{kin}^0 \left(\frac{f}{f^0} \right)^2 \tag{4.1}$$

The change in power which accompanies this change in energy is given by:

$$\begin{aligned} \Delta P_G - \Delta P_D &= \text{change in generator output - change in customer demand} \\ &= \frac{d}{dt}(\mathrm{W_{kin}}) + \mathrm{D}\Delta\mathrm{f} \end{aligned} \tag{4.2}$$

where $D = \frac{\partial P_D}{\partial f}$ is the change in system demand due to a change in frequency and is assumed positive. The frequency can be described in terms of the initial frequency and the change in frequency:

$$f = f^0 + \Delta f \tag{4.3}$$

and therefore:

$$\begin{aligned} W_{kin} &= W_{kin}^0 \left[\frac{f^0 + \Delta f}{f^0} \right]^2 \\ &= W_{kin}^0 \left[1 + 2\frac{\Delta f}{f^0} + \left(\frac{\Delta f}{f^0} \right)^2 \right] \\ &\approx W_{kin}^0 \left[1 + 2\frac{\Delta f}{f^0} \right] \end{aligned} \tag{4.4}$$

$$\Delta P_G - \Delta P_D = \frac{2W_{kin}^0}{f^0} \frac{d}{dt}[\Delta f] + D\Delta f \tag{4.5}$$

The kinetic energy can be described in terms of the inertia constant H where

$$H = \frac{\text{kinetic energy}}{\text{rated MW}} = \frac{MW \times s}{MW} (= \text{seconds})$$

In terms of per unit we have:

$$\Delta P_{Gpu} - \Delta P_{Dpu} = \frac{2H}{f^0}\frac{d\Delta f}{dt} + D\Delta f \tag{4.6}$$

If we take the Laplace transform of this equation, and dropping the pu notation, we have:

$$\Delta P_G(s) - \Delta P_D(s) = \frac{2H}{f^0} s\Delta F(s) + D\Delta F(s) \tag{4.7}$$

or

$$\begin{aligned} &\Delta F(s) = G_P(s)\left[\Delta P_G(s) - \Delta P_D(s)\right] \\ &G_P(s) = \frac{K_P}{1+sT_P} \\ &T_P = \frac{2H}{f^0 D} \\ &K_P = \frac{1}{D} \end{aligned} \tag{4.8}$$

K_P relates the change in power to the change in frequency. The static performance of the power system is given by:

$$\Delta f = K_P\left[\Delta P_G - \Delta P_D\right] \tag{4.9}$$

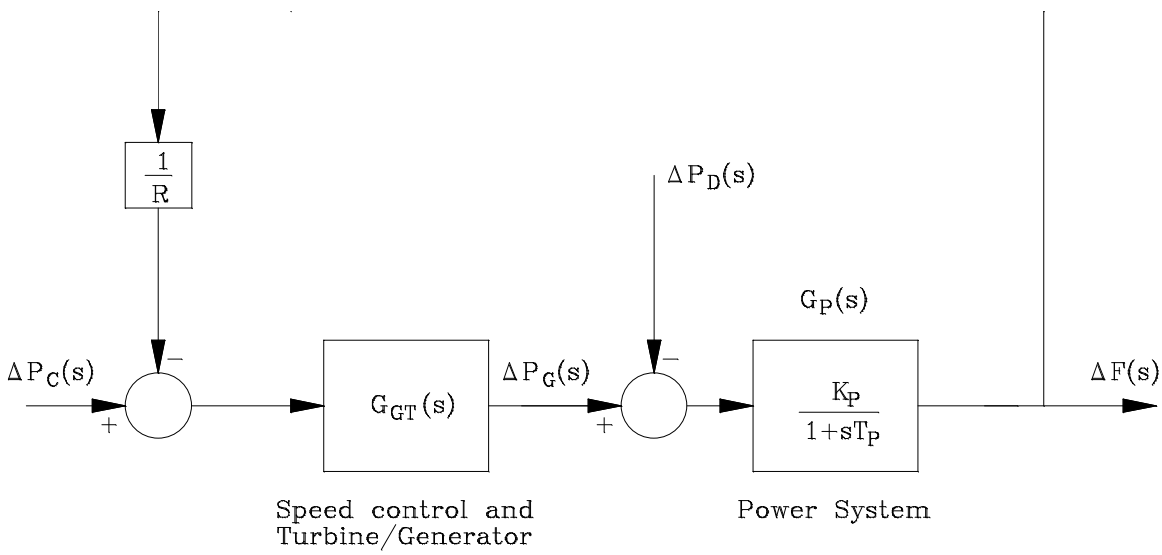

Figure 8 Single control area

The combined turbine/generator/speed control and power system model is shown in Figure 8 above. The combined transfer function, relating changes in frequency to changes in the reference power and to changes in the power demand in the system is given by:

$$\Delta F = \frac{G_P G_G G_T}{1+\frac{1}{R}G_P G_G G_T}\Delta P_C - \frac{G_P}{1+\frac{1}{R}G_P G_G G_T}\Delta P_D \tag{4.10}$$

If ΔP_C=0 (no change in reference power) and if a step change occurs in the load demand:

$$\Delta P_D(s) = \frac{M}{s}$$

then the change in frequency is given by:

$$\Delta F = -\frac{G_P}{1+\frac{1}{R}G_P G_G G_T}\frac{M}{s} \tag{4.11}$$

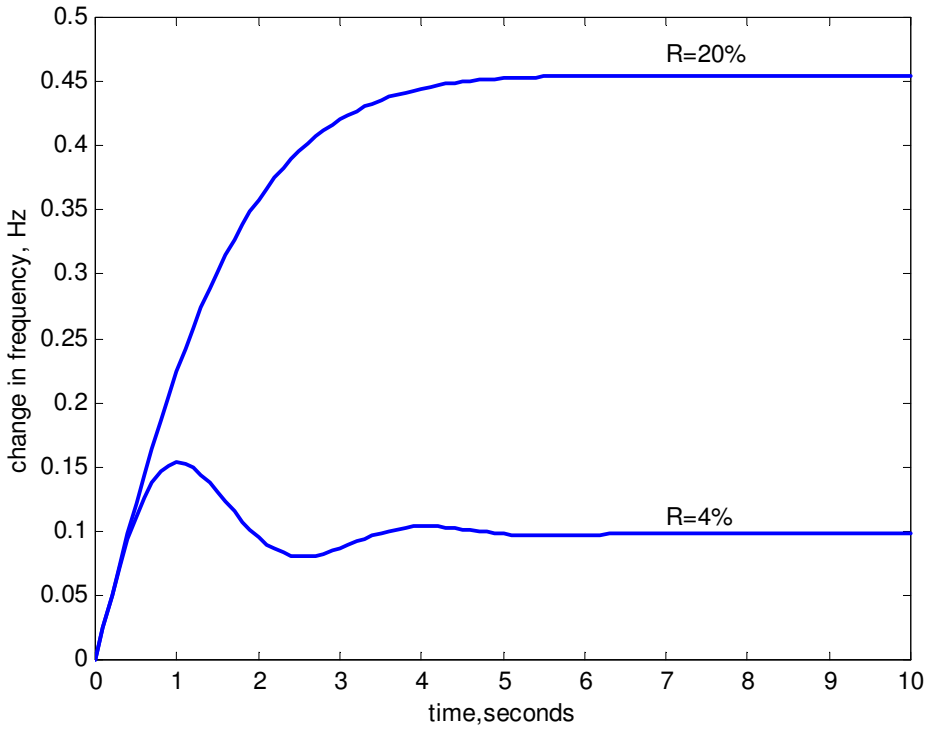

Figure 9 Step response of system, ΔP_D = -0.05 p.u.

Figure 9 shows the response in system frequency for two different values of regulation R. The step load change is -0.05 pu (decrease in load) in both cases. The steady-state frequency change can be determined by applying the Final Value Theorem to the above equation:

$$\begin{aligned}\underset{t\to\infty}{\Delta f} &= \underset{s\to 0}{L}\, s\Delta F(s) \\ &= \frac{-K_P}{1+K_p/R}M \\ &= \frac{-M}{D+1/R} = \frac{-M}{\beta}\end{aligned} \tag{4.12}$$

where $\beta = D + 1/R$ and is called the Area Frequency Response Characteristic (AFRC). Considering the case shown in Figure 9 above where $\Delta P_D = -0.05pu$ and D =0.01 puMW/Hz, for

R = 4%, β = 0.01+0.5 = 0.51, Δf=0.098Hz

R = 20%, β = 0.01+0.1 = 0.11, Δf=0.454Hz

For R=∞, β=0.01 and the change in frequency is 5Hz. In this case, the original change in demand is completely balanced by an equal and opposite drop in system demand because of the drop in frequency and there is no increase in output power.

We can identify three sources of power in the system to meet an increase in demand which is accompanied by a frequency drop:

a) The change in kinetic energy of the rotating machinery. As the frequency drops, energy is released by the machines and this provides a short-term source of power.
b) Increased generation because of the speed control loop.
c) A reduction in load due to a decrease in frequency.

Often, the time constants T_G and T_T are set to zero to simplify the analysis as this reduces the system to a first order model. The steady-state values remain unchanged but the dynamic behaviour changes greatly.

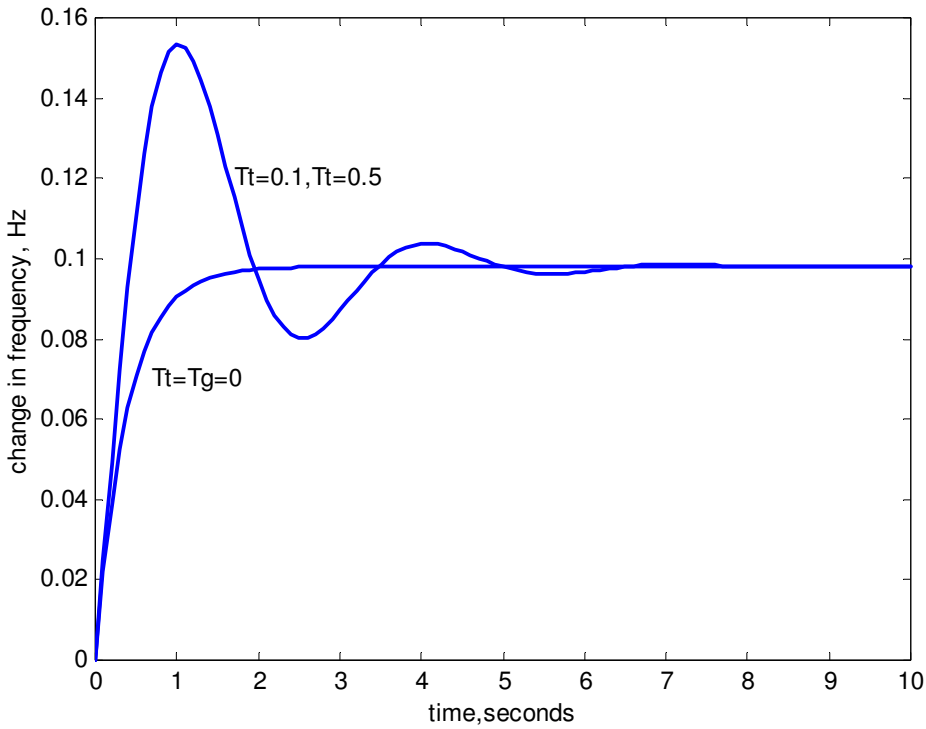

Figure 10 Effect of time constants

5. The Reset Loop

With the speed governor action only, there is a finite error in the frequency when the system settles down again to the steady-state and is given by:

$$\Delta f = \frac{-M}{\beta} \tag{5.1}$$

Therefore, integral control action is added which changes the reference power level and returns the system frequency error to zero.

$$\Delta P_C = -K_I \int \Delta f dt \tag{5.2}$$

The change in reference power is proportional to the integral of the frequency error. If there is a negative (decrease) change in frequency, the reference power increases to restore the frequency to its nominal value. The reference power continues to increase until the frequency error is zero, after which it remains constant at $\Delta P_C = -\Delta P_D$. The system with reset loop included is shown in Figure 11 below.

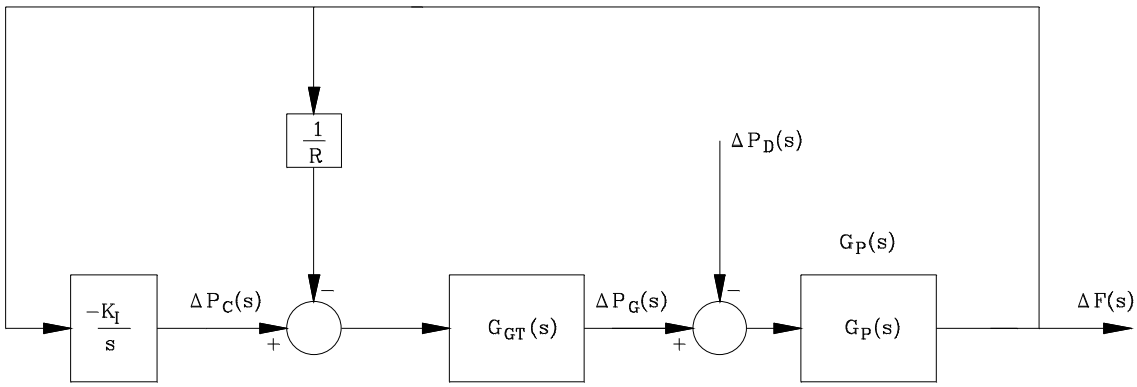

Figure 11 Single control area with integral control

If we set T_G and T_T to zero to simplify the analysis, the transfer function of the above system becomes:

$$\frac{\Delta F(s)}{\Delta P_D(s)} = \frac{\dfrac{-K_P}{1+sT_P}}{1+\left[\dfrac{-K_P}{1+sT_P}\right]\left[-\dfrac{1}{R}-\dfrac{K_I}{s}\right]}$$

$$= \frac{-K_P R s}{s^2 T_P R + s(R+K_P) + K_P K_I R} \tag{5.3}$$

$$= \frac{-K_P s / T_P}{s^2 + s(1/T_P + K_P / T_P R) + K_P K_I / T_P}$$

The characteristic equation can be re-written as:

$$\left(s + \frac{1+K_P/R}{2T_P}\right)^2 + \frac{K_P K_I}{T_P} - \left(\frac{1+K_P/R}{2T_P}\right)^2 = 0 \tag{5.4}$$

and if

$$K_I > \frac{1}{4T_P K_P}(1+K_P/R)^2 \tag{5.5}$$

the system will be oscillatory. For example, with T_P=20 sec., D=0.01 puMW/Hz, R=2Hz/puMW, the system becomes oscillatory at K_I=0.325. The responses for two different values of integral gain are shown in Figure 12 below.

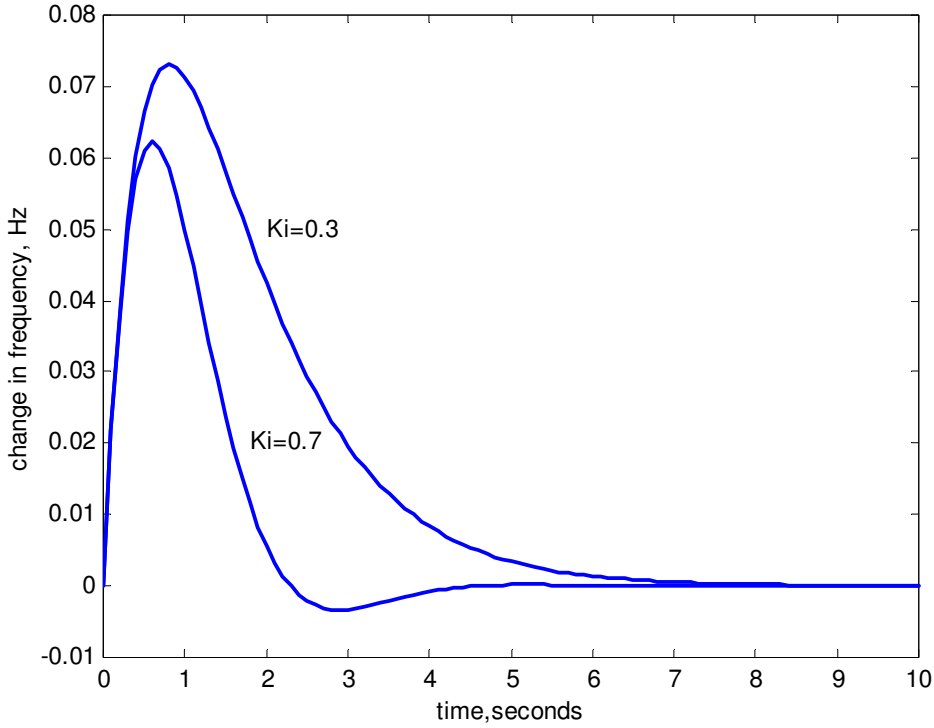

Figure 12 Effect of integral control gain

A higher gain in the reset loop will lead to a faster response but will also cause oscillations and, if this gain exceeds a critical value, cause instability.

For clocks which are controlled by the system frequency, every change in the frequency (even transient changes) will cause time errors. The error introduced over a time T can be expressed as:

$$t_e = \frac{1}{f^0}\int_0^T \Delta f dt \qquad (5.6)$$

Problem:

By applying the Final Value Theorem, calculate the time error due to a change in demand of 0.05pu in the system shown in Figure 12 above if the integral control gain is 0.7. Suggest how this error might be subsequently set to zero.

6. Pool Operation

We have considered the operation of a single, isolated power system. In situations where a number of systems are connected by interties, then there are advantages to be gained for the overall system both in terms of the normal operation and for emergency conditions. Interconnected systems can provide support for each other in the event of a sudden application of a large load or fault condition. A combined system will lead to more economic operation. The rules of pool operation are usually such that each area carries its own load except under mutually agreed circumstances. Because a number of systems connected together represents a much larges system, the impact of any load change in terms of frequency change will be much smaller than it would be on single system. Figure 13 shows the response of a single area and Figure 14 shows the response of a two area system to the same load change.

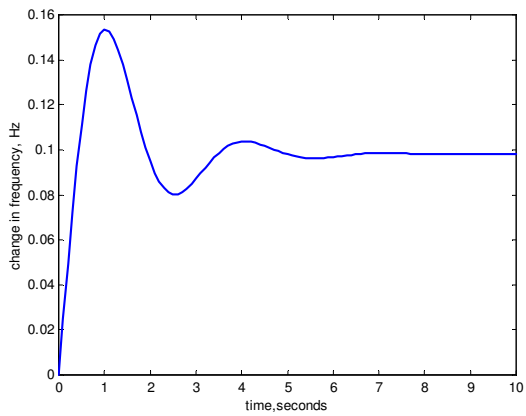

Figure 13 Response of single area

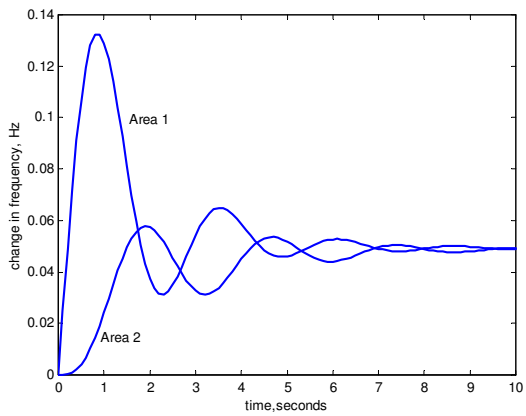

Figure 14 Response of two areas

The power transfer over a connection between two areas is given by:

$$P_{12} = \frac{|V_1||V_2|}{X}\sin(\delta_1 - \delta_2) \tag{6.1}$$

where P_{12} is the power flow from area 1 to area 2, $V_1\angle\delta_1$ and $V_2\angle\delta_2$ are the voltage at each end of the connecting line and X is the reactance of that line. Initially, the operating point is given by:

$$P_{12}^0 = \frac{|V_1^0||V_2^0|}{X}\sin(\delta_1^0 - \delta_2^0) \tag{6.2}$$

and small deviations from this point are given by:

$$\Delta P_{12} = \frac{|V_1^0||V_2^0|}{X}\cos(\delta_1^0 - \delta_2^0)(\Delta\delta_1 - \Delta\delta_2) \tag{6.3}$$

where the any changes in the voltage magnitudes in each system are neglected. This equation may be written as:

$$\begin{aligned} \Delta P_{12} &= T_{12}^0(\Delta\delta_1 - \Delta\delta_2) \\ T_{12}^0 &= \frac{|V_1^0||V_2^0|}{X}\cos(\delta_1^0 - \delta_2^0) \end{aligned} \tag{6.4}$$

T_{12}^0 is called the synchronising coefficient and is determined by the operating point. The change in frequency is given by:

$$\Delta f = \frac{1}{2\pi}\left[\frac{d}{dt}(\delta^0 + \Delta\delta)\right] = \frac{1}{2\pi}\frac{d(\Delta\delta)}{dt} \tag{6.5}$$

$$\Delta\delta = 2\pi\int_0^t \Delta f dt \tag{6.6}$$

and therefore

$$\Delta P_{12} = 2\pi T_{12}^0 (\int_0^t \Delta f_1 dt - \int_0^t \Delta f_2 dt) \tag{6.7}$$

or taking the Laplace Transform gives:

$$\Delta P_{12} = \frac{2\pi T_{12}^0}{s}\left(\Delta F_1(s) - \Delta F_2(s)\right) \tag{6.8}$$

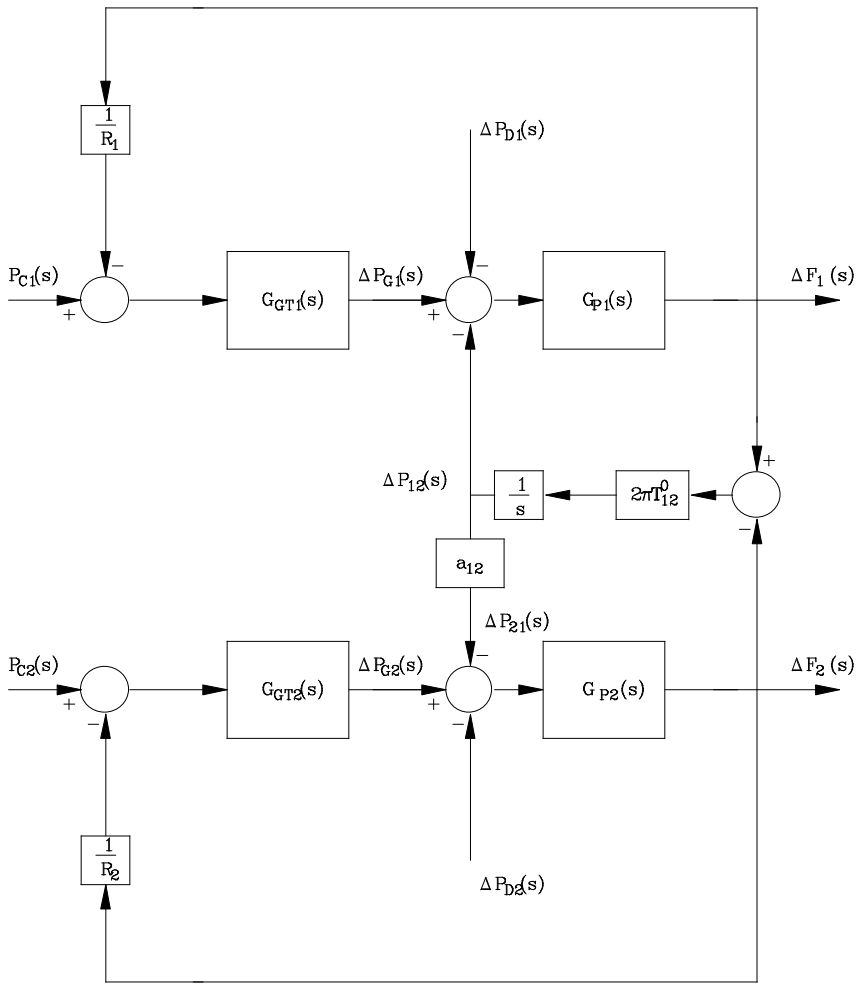

Figure 15 Transfer function representation of two areas

Figure 15 above shows the representation of a two-area system with the interconnection between the areas included. The frequency deviation for areas 1 and 2 are given by:

$$\Delta F_1(s) = \frac{-G_{P1}(s)}{1+G_{P1}(s)/R_1}\left(\Delta P_{D1} + \Delta P_{12}\right)$$
$$\Delta F_2(s) = \frac{-G_{P2}(s)}{1+G_{P2}(s)/R_2}\left(\Delta P_{D2} + a_{12}\Delta P_{12}\right) \tag{6.9}$$

$$\Delta P_{12} = \frac{2\pi T_{12}^0}{s}\left(\Delta F_1(s) - \Delta F_2(s)\right) \tag{6.10}$$

$$a_{12} = -\frac{\text{Power Base Area 1}}{\text{Power Base Area 2}} \tag{6.11}$$

Combining these three equations allows us to calculate the frequency deviation for each area and the power transfer between the areas. Consider a change in load of M_1 in area 1 and a change in load of M_2 in area 2. By the Final Value Theorem, we can show that the steady-state power flow between these areas as a result of these load changes is given by:

$$\Delta P_{12} = \frac{\beta_1 M_2 - \beta_2 M_1}{-a_{12}\beta_1 + \beta_2} \tag{6.12}$$

where:
$$\beta_1 = D_1 + 1/R_1$$
$$\beta_2 = D_2 + 1/R_2$$

and the frequency deviations are given by:

$$\Delta f_1 = -\left[\frac{M_1 + M_2}{-a_{12}\beta_1 + \beta_2}\right]$$
$$\Delta f_2 = -\left[\frac{M_1 + M_2}{-a_{12}\beta_1 + \beta_2}\right] \tag{6.13}$$

Obviously since the areas are interconnected, they will both settle down to the same frequency deviation.

Problem:

Two areas connected by a transmission line and have the following values:

Area 1: $R=4\%$, $T_P=20sec$, $D=0.01$, $\Delta P_D=-0.05$

Area 2: $R=8\%$, $T_P=20sec$, $D=0.05$, $\Delta P_D=0.03$

Calculate the eventual steady-state power flow between the areas and the frequency deviation.

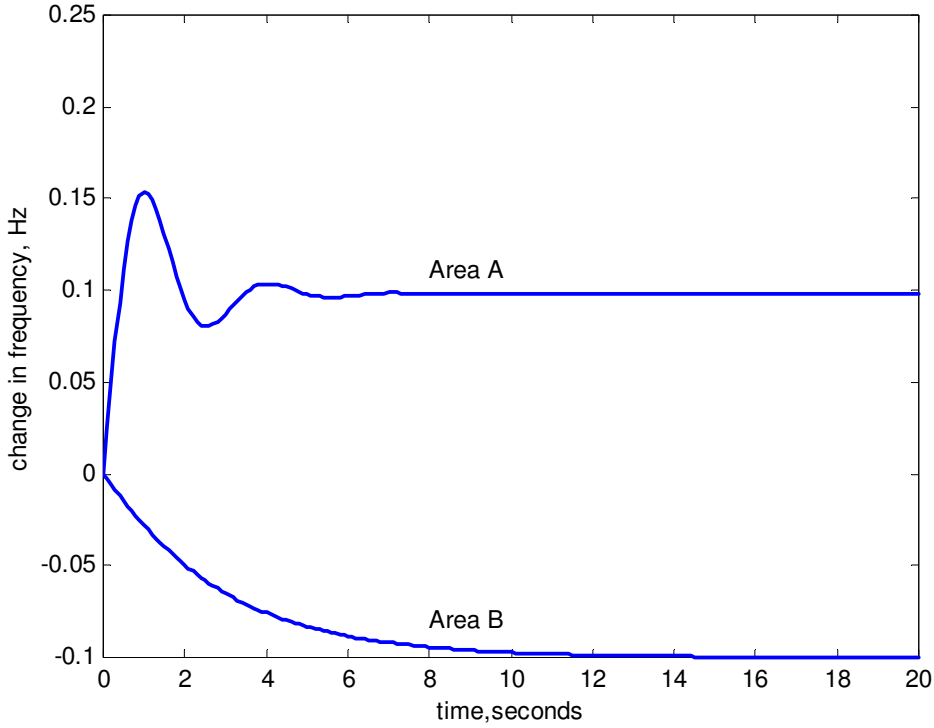

Figure 16 Response of areas without interconnection

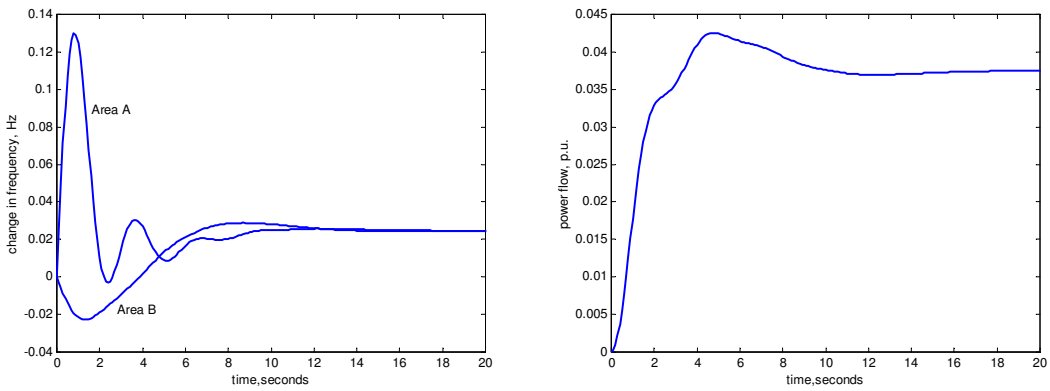

Figure 17 Response of areas with interconnection, frequency and power

Figure 16 above shows the response of these systems without an interconnection. The frequency changes are different as there is no connection. The situation with an interconnection is shown in Figure 17. Obviously, with this system, there is a finite frequency error again (the same for both areas) and an unscheduled power flow between the areas. As before, we wish to return both the change in frequency and the power to zero and this is accomplished by integral control action.

The area control error (ACE) consists of components of the power error and the frequency error and is given by:

$$\begin{aligned} ACE_1 &= \Delta P_{12} + B_1 \Delta f_1 \\ ACE_2 &= \Delta P_{21} + B_2 \Delta f_2 \end{aligned} \tag{6.14}$$

and B is the frequency bias parameter. The changes in reference power now become:

$$\Delta P_{C1} = -K_{I1}\int\left(\Delta P_{12} + B_1\Delta f_1\right)dt$$
$$\Delta P_{C2} = -K_{I2}\int\left(\Delta P_{21} + B_2\Delta f_2\right)dt \tag{6.15}$$

and taking the Laplace Transform:

$$\Delta P_{C1}(s) = -\frac{K_{I1}}{s}\left(\Delta P_{12}(s) + B_1\Delta F_1(s)\right)$$
$$\Delta P_{C2}(s) = -\frac{K_{I2}}{s}\left(\Delta P_{21}(s) + B_2\Delta F_2(s)\right) \tag{6.16}$$

The static response is given by:

$$ACE_1 = \Delta P_{12} + B_1\Delta f_1 = \Delta P_{12} + B_1\Delta f = 0$$
$$ACE_2 = \Delta P_{21} + B_2\Delta f_2 = \Delta P_{21} + B_2\Delta f = 0 \tag{6.17}$$

and this condition is met for Δf=0 and $\Delta P_{12} = \Delta P_{21} = 0$.

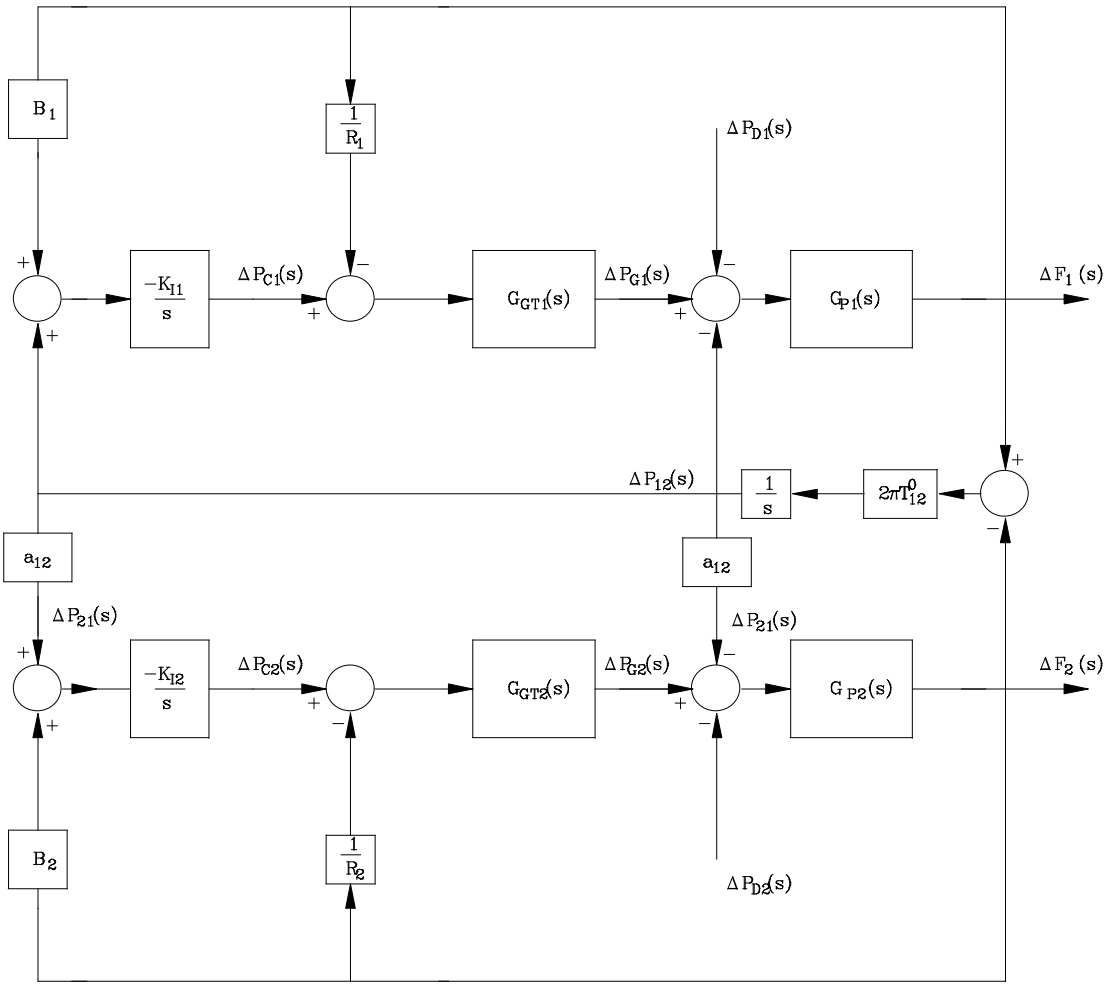

Figure 18 Representation of two-area system with ACE control

Figure 18 above shows the two-are representation with both frequency and power integral control. The relative values of B and K_I are selected to control how quickly the frequency and power are driven to zero after a disturbance. For example, in Figure 19 below, the frequency and power flow between the areas is shown where B is zero for both areas and K_I=0.5 for both areas. As can be seen, the power flow returns to zero but a sustained frequency error is present.

On the other hand, if we make B=40 for both areas and if K_I is very small, then as can be seen in Figure 20, the power flow is very slow in returning to zero even though the frequency error rapidly dies away. Figure 21 shows a reasonable compromise between these two extremes.

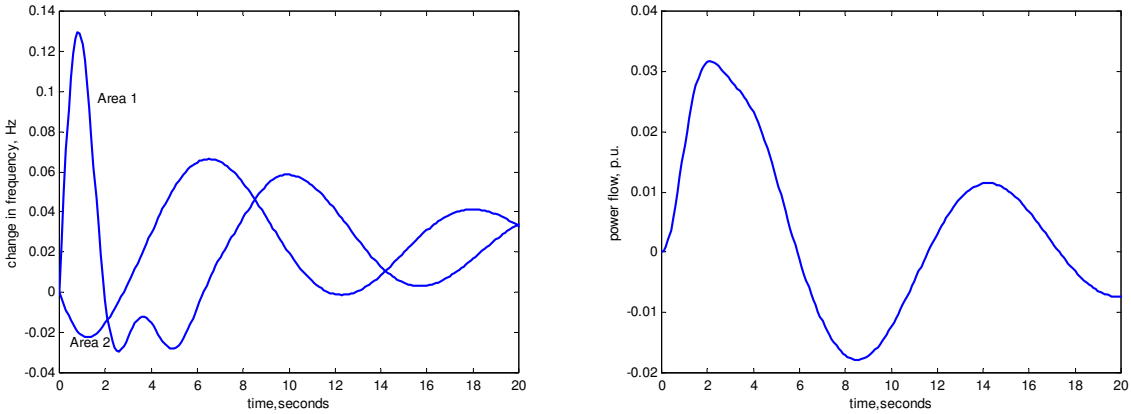

Figure 19 Power integral control only

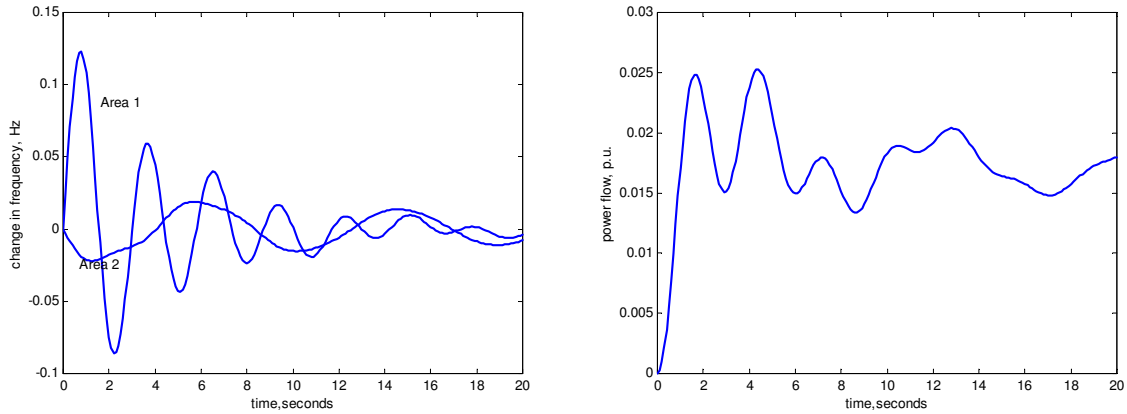

Figure 20 Frequency integral control only

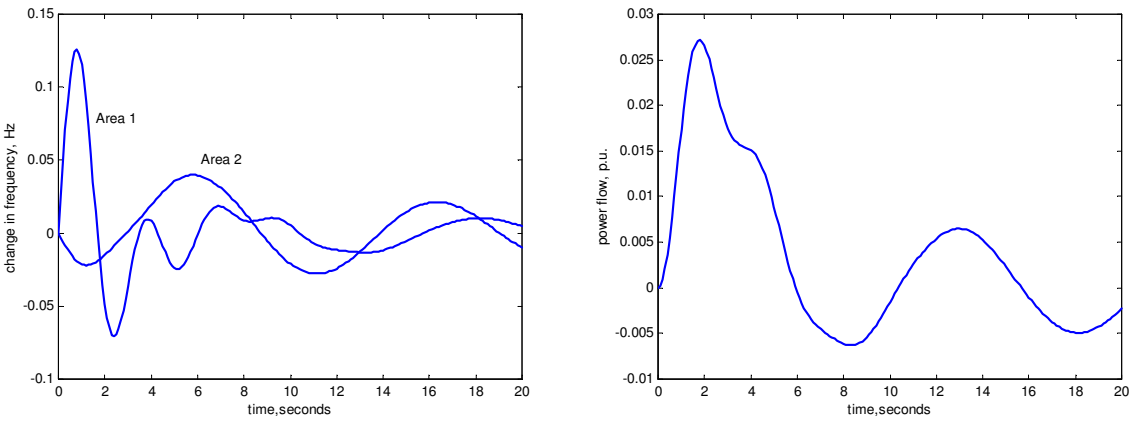

Figure 21 Combined Frequency and power integral control

7. State-Space Representation of a Two Area System

For analysis of larger linear systems, the state-space representation is used. This allows for a more convenient approach to analysis and controller design. This section looks at the state-space representation of the two-area system is developed.

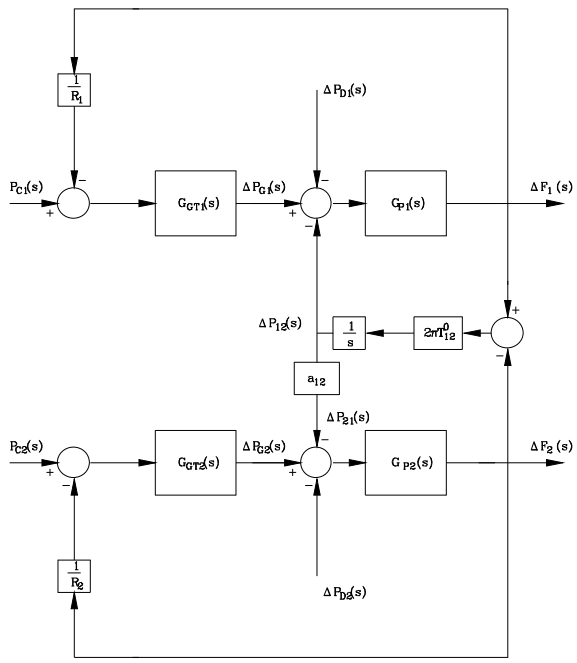

Figure 22 Representation of two-area system

Figure 22 hows the block diagram representation of the two-area system as discussed earlier. The individual states are identified as follows:

$$x_1(s) = \Delta F_1(s) = \frac{K_{P1}}{1 + sT_{P1}}\left[\Delta P_{G1} - \Delta P_{D1} - \Delta P_{12}\right]$$

$$x_2(s) = \Delta F_2(s) = \frac{K_{P2}}{1 + sT_{P2}}\left[\Delta P_{G2} - \Delta P_{D2} - a_{12}\Delta P_{12}\right]$$

$$x_3(s) = \frac{1}{1 + sT_{G1}}\left[\Delta P_{C1} - \frac{1}{R_1}\Delta F_1\right]$$

$$x_4(s) = \frac{1}{1 + sT_{G2}}\left[\Delta P_{C2} - \frac{1}{R_2}\Delta F_2\right]$$

$$x_5(s) = \Delta P_{G1} = \frac{1}{1 + sT_{T1}} x_3(s)$$

$$x_6(s) = \Delta P_{G2} = \frac{1}{1 + sT_{T2}} x_4(s)$$

$$x_7(s) = \frac{2\pi T_{12}^0}{s}\left[\Delta F_1(s) - \Delta F_2(s)\right] = \Delta P_{12}$$

and the corresponding differential equations are given by:

$$\dot{x}_1 = -\frac{1}{T_{P1}} x_1 + \frac{K_{P1}}{T_{P1}} x_5 - \frac{K_{P1}}{T_{P1}} x_7 - \frac{K_{P1}}{T_{P1}} \Delta P_{D1}$$

$$\dot{x}_2 = -\frac{1}{T_{P2}} x_2 + \frac{K_{P2}}{T_{P2}} x_6 - a_{12} \frac{K_{P2}}{T_{P2}} x_7 - \frac{K_{P2}}{T_{P2}} \Delta P_{D2}$$

$$\dot{x}_3 = -\frac{1}{T_{G1}} x_3 - \frac{1}{R_1 T_{G1}} x_1 + \frac{1}{T_{G1}} \Delta P_{C1}$$

$$\dot{x}_4 = -\frac{1}{T_{G2}} x_4 - \frac{1}{R_2 T_{G2}} x_2 + \frac{1}{T_{G2}} \Delta P_{C2}$$

$$\dot{x}_5 = \frac{1}{T_{T1}} x_3 - \frac{1}{T_{T1}} x_5$$

$$\dot{x}_6 = \frac{1}{T_{T2}} x_4 - \frac{1}{T_{T2}} x_6$$

$$\dot{x}_7 = 2\pi T_{12}^0 \left[x_1 - x_2 \right]$$

These equations can we written in conventional state-space form as follows:

$$\dot{x} = Ax + Bu + \Gamma p \tag{7.1}$$

where:

$$x = \begin{bmatrix} x_1 \\ x_2 \\ x_3 \\ x_4 \\ x_5 \\ x_6 \\ x_7 \end{bmatrix}; \quad u = \begin{bmatrix} u_1 \\ u_2 \end{bmatrix} = \begin{bmatrix} \Delta P_{C1} \\ \Delta P_{C2} \end{bmatrix}; \quad p = \begin{bmatrix} p_1 \\ p_2 \end{bmatrix} = \begin{bmatrix} \Delta P_{D1} \\ \Delta P_{D2} \end{bmatrix}$$

$$A = \begin{bmatrix} -\frac{1}{T_{P1}} & 0 & 0 & 0 & \frac{K_{P1}}{T_{P1}} & 0 & -\frac{K_{P1}}{T_{P1}} \\ 0 & -\frac{1}{T_{P2}} & 0 & 0 & 0 & \frac{K_{P2}}{T_{P2}} & -a_{12}\frac{K_{P2}}{T_{P2}} \\ -\frac{1}{R_1 T_{G1}} & 0 & -\frac{1}{T_{G1}} & 0 & 0 & 0 & 0 \\ 0 & -\frac{1}{R_2 T_{G2}} & 0 & -\frac{1}{T_{G2}} & 0 & 0 & 0 \\ 0 & 0 & \frac{1}{T_{T1}} & 0 & -\frac{1}{T_{T1}} & 0 & 0 \\ 0 & 0 & 0 & \frac{1}{T_{T2}} & 0 & -\frac{1}{T_{T2}} & 0 \\ 2\pi T_{12}^0 & -2\pi T_{12}^0 & 0 & 0 & 0 & 0 & 0 \end{bmatrix}$$

$$B = \begin{bmatrix} 0 & 0 \\ 0 & 0 \\ \frac{1}{T_{G1}} & 0 \\ 0 & \frac{1}{T_{G2}} \\ 0 & 0 \\ 0 & 0 \\ 0 & 0 \end{bmatrix}; \quad \Gamma = \begin{bmatrix} \frac{-K_{P1}}{T_{G1}} & 0 \\ 0 & \frac{-K_{P2}}{T_{G2}} \\ 0 & 0 \\ 0 & 0 \\ 0 & 0 \\ 0 & 0 \\ 0 & 0 \end{bmatrix}$$

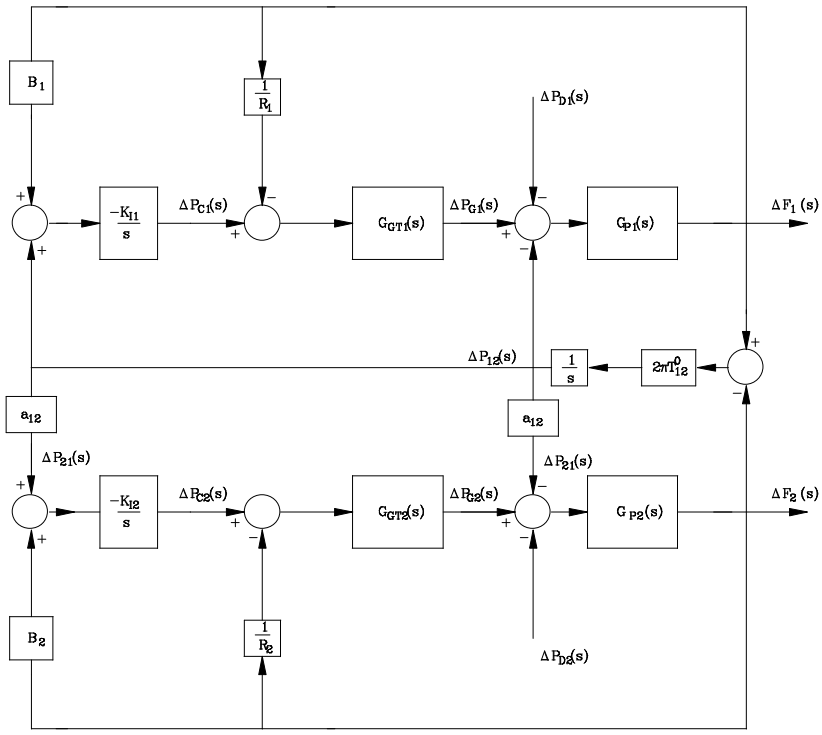

Figure 23 Two-area system with ACE

If ACE control is implemented, as shown in Figure 23, then the state-space representation is augmented to include the reference power for each area ΔP_{C1} and ΔP_{C2} as states and becomes:

$$x_8(s) = -\frac{K_{I1}}{s}\left[B_1 \Delta F_1 + \Delta P_{12}\right] = \Delta P_{C1}$$

$$x_9(s) = -\frac{K_{I2}}{s}\left[B_2 \Delta F_2 + a_{12} \Delta P_{12}\right] = \Delta P_{C2}$$

and these changes are made to the differential equations:

$$\dot{x}_3 = -\frac{1}{T_{G1}} x_3 - \frac{1}{R_1 T_{G1}} x_1 + \frac{1}{T_{G1}} x_8$$

$$\dot{x}_4 = -\frac{1}{T_{G2}} x_4 - \frac{1}{R_2 T_{G2}} x_2 + \frac{1}{T_{G2}} x_9$$

$$\dot{x}_8 = -K_{I1} B_1 x_1 - K_{I1} x_7$$

$$\dot{x}_9 = -K_{I2} B_2 x_2 - a_{12} K_{I2} x_7$$

and the state-space representation becomes:

$$\dot{x} = Ax + \Gamma p \tag{7.2}$$

where:

$$x = \begin{bmatrix} x_1 \\ x_2 \\ x_3 \\ x_4 \\ x_5 \\ x_6 \\ x_7 \\ x_8 \\ x_9 \end{bmatrix} \qquad \Gamma = \begin{bmatrix} \frac{-K_{P1}}{T_{G1}} & 0 \\ 0 & \frac{-K_{P2}}{T_{G2}} \\ 0 & 0 \\ 0 & 0 \\ 0 & 0 \\ 0 & 0 \\ 0 & 0 \\ 0 & 0 \\ 0 & 0 \end{bmatrix}$$

$$A = \begin{bmatrix} -\frac{1}{T_{P1}} & 0 & 0 & 0 & \frac{K_{P1}}{T_{P1}} & 0 & -\frac{K_{P1}}{T_{P1}} & 0 & 0 \\ 0 & -\frac{1}{T_{P2}} & 0 & 0 & 0 & \frac{K_{P2}}{T_{P2}} & -a_{12}\frac{K_{P2}}{T_{P2}} & 0 & 0 \\ -\frac{1}{R_1 T_{G1}} & 0 & -\frac{1}{T_{G1}} & 0 & 0 & 0 & 0 & \frac{1}{T_{G1}} & 0 \\ 0 & -\frac{1}{R_2 T_{G2}} & 0 & -\frac{1}{T_{G2}} & 0 & 0 & 0 & 0 & \frac{1}{T_{G2}} \\ 0 & 0 & \frac{1}{T_{T1}} & 0 & -\frac{1}{T_{T1}} & 0 & 0 & 0 & 0 \\ 0 & 0 & 0 & \frac{1}{T_{T2}} & 0 & -\frac{1}{T_{T2}} & 0 & 0 & 0 \\ 2\pi T_{12}^0 & -2\pi T_{12}^0 & 0 & 0 & 0 & 0 & 0 & 0 & 0 \\ -K_{I1}B_1 & 0 & 0 & 0 & 0 & 0 & -K_{I1} & 0 & 0 \\ 0 & -K_{I2}B_2 & 0 & 0 & 0 & 0 & -a_{12}K_{I2} & 0 & 0 \end{bmatrix}$$

References

1. O.I. Elgerd, ***Electric energy systems theory: An Introduction***, McGraw Hill, 1983
2. C.A. Gross, ***Power systems analysis***, Wiley, 1986
3. B.M. Weedy, ***Electric power systems***, Wiley, 1972
4. W.D. Stevenson, ***Elements of power system analysis***, McGraw Hill, 1986, Chap. 8
5. ***Dynamic models for steam and hydro turbines in power system studies***, IEEE Committee report, IEEE Trans., Vol. PAS-92, No. 6, Nov./Dec. 1973
6. T.M. Athay, ***Generation scheduling and control***, Proc. IEEE, Vol. 75, No.12, 1987
7. A.J. Wood and B.F. Wollenburg, ***Power generation, operation, and control***, Wiley, 1984
8. O.I. Elgerd and C.E. Fosha, ***Optimum megawatt-frequency control of multiarea electric energy systems***, IEEE Trans., PAS-89, No. 4, April 1970, p 556
9. P. Kundur, ***Power System Strability and Control,*** McGraw-Hill, 1994, Chap. 11

Michael F. Conlon
September 2003